405 S Rotary cultivator

Documents

Speed-change gear box

Clutch (fino al 2019)

Clutch (dopo 2019)

Speed gears of the gearbox

Axle and wheels (da 2019)

Axle and wheels (fino 2019)

Internals controls

Handlebar rod and handle bars

60 cm rotor with adjustable cowling and fixed connection 69219103

60 cm rotor with adjustable cowling and quickfit connection 69219089

Oil bath movement 69229096/69229096A

Quickfit 69212006

Special cutter bar 69229084/69229085/69229086/69229087

Special cutter bar 69229068/69229069/69229070/69229071

Special cutter bar 69229068A/69229069A/69229070A/69229071A

Cutter bar L0066900

Copyright EMAK S.P.A.

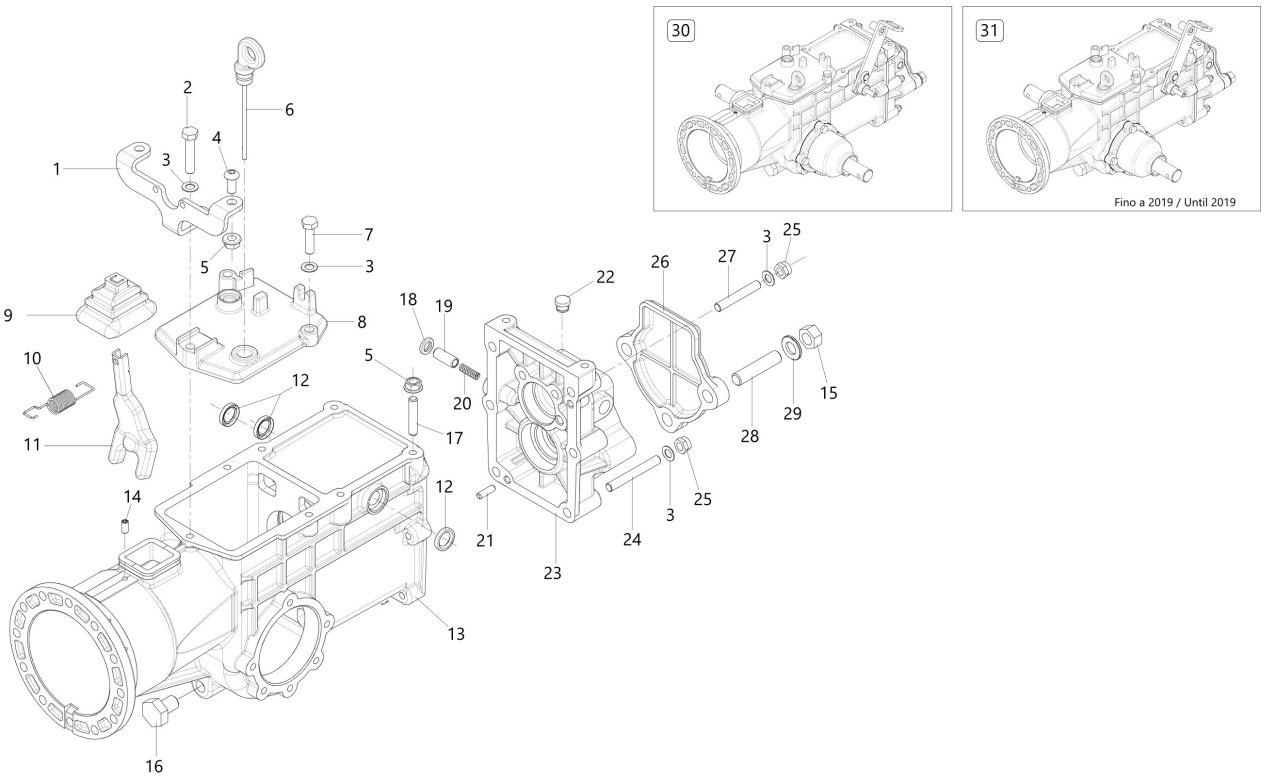

Copyright EMAK S.P.A.

Illustration Speed-change gear box

Ref.Nu	Qty	Part number	Description	Validity from	Validity till	Notes	Bulletin
1	1	68350156AR	Support				
2	1	3806076R	Screw				
3	6	-	Not available for this product				
4	2	YN6255100	Screw				
5	6	3933032R	Nut				
6	1	68350157R	Oil level plug				
7	3	322000001R	Screw				
8	1	68350197R	Cover				
9	1	YF0751646	Bellows				
10	1	68350172AR	Spring				
11	1	YF0750011G	Lever				
12	3	YN0203000	Seal ring				
13	1	68350200R	Speed-change gear box				
14	1	YN6203600	Screw				
15	3	YN1470500	Nut				
16	1	YN5254000	Oil cap				
17	4	YN3815300	Stud				
18	1	YN0281400	Ring				
19	1	YF1291661	Cap				
20	1	YN3101020	Spring				
21	2	YN5124300	Pin				
22	1	3045006R	Cap				
23	1	YF1290817	Set cover				
24	4	YN3825750	Stud				
25	6	YN1458800	Nut				
26	1	YF1050833	Cover				
27	2	YN3825400	Stud				
28	3	YN3861500	Stud				
29	3	YN4387700	Washer				
30	1	68352023R	Unit (Gear)				
31		-	Not available for this product				

Copyright EMAK S.P.A.

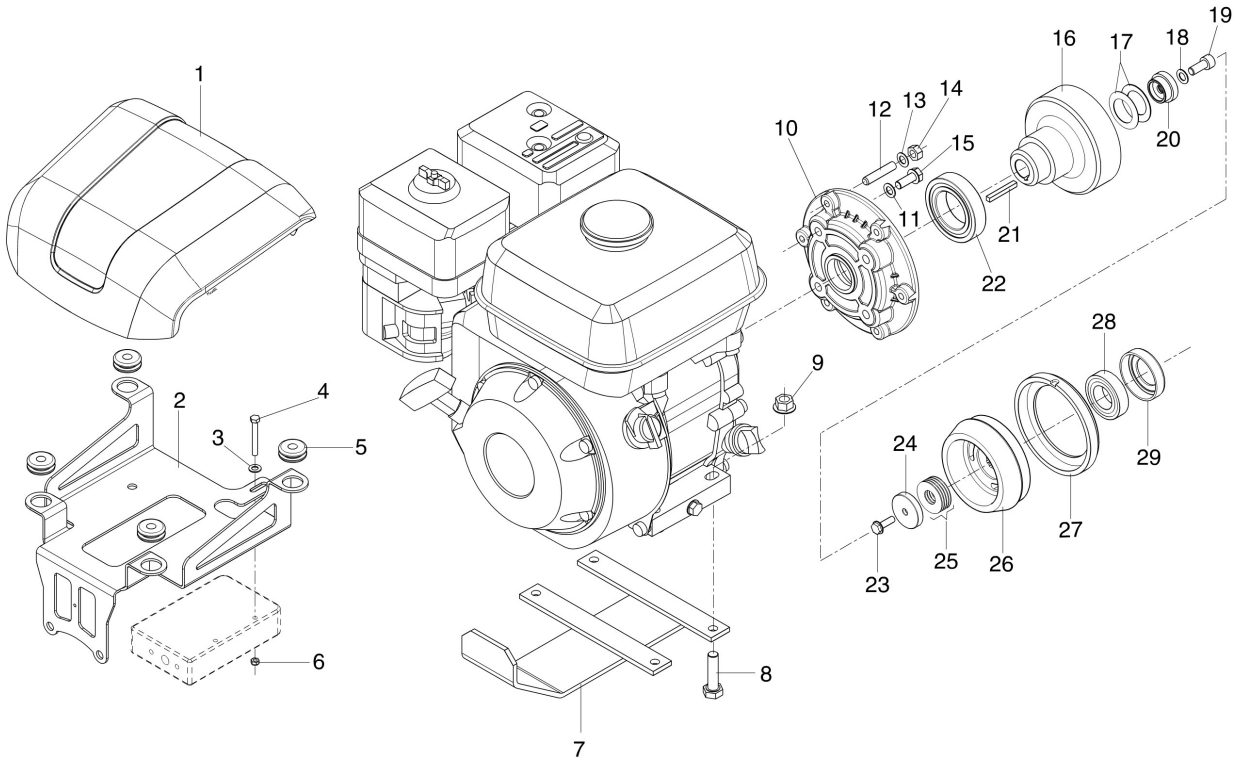

Copyright EMAK S.P.A.

Ref.Nu	Qty	Part number	Description	Validity from	Validity till	Notes	Bulletin
1	1	68350190R	Hood			Azzurro; Light blue	
2	1	68350065BR	Support				
3	2	3916006R	Washer				
4	2	310000009R	Screw				
5	4	68350114R	Support (Hood)				
6	2	028200069R	Nut				
7	1	68640136DR	Guard				
8	4	YN6335900	Screw				
9	4	3914001R	Nut				
10	1	68310038AR	Flange				
11	4	YN6243980	Screw				
12	6	YN3815300	Stud				
13	6	YN4365400	Washer				
14	6	YN1458020	Nut				
15	4	YN6243980	Screw				
16	1	68350073AR	Hub (Clutch drum)				
17	4	68350212R	Cup washer				
18	1	YN4365400	Washer				
19	1	YN6243950	Screw				
20	1	68350069R	Bushing				
21	1	YN0643450	Key				
22	1	N1289300R	Bearing				
23	1	3906037R	Screw				
24	1	68350068AR	Bushing				
25	10	68350035AR	Cup washer				
26	1	68350215R	Clutch cone				
27	1	68320137AR	Ring				
28	1	N1270400	Bearing				
29	1	68350076R	Cover				

Copyright EMAK S.P.A.

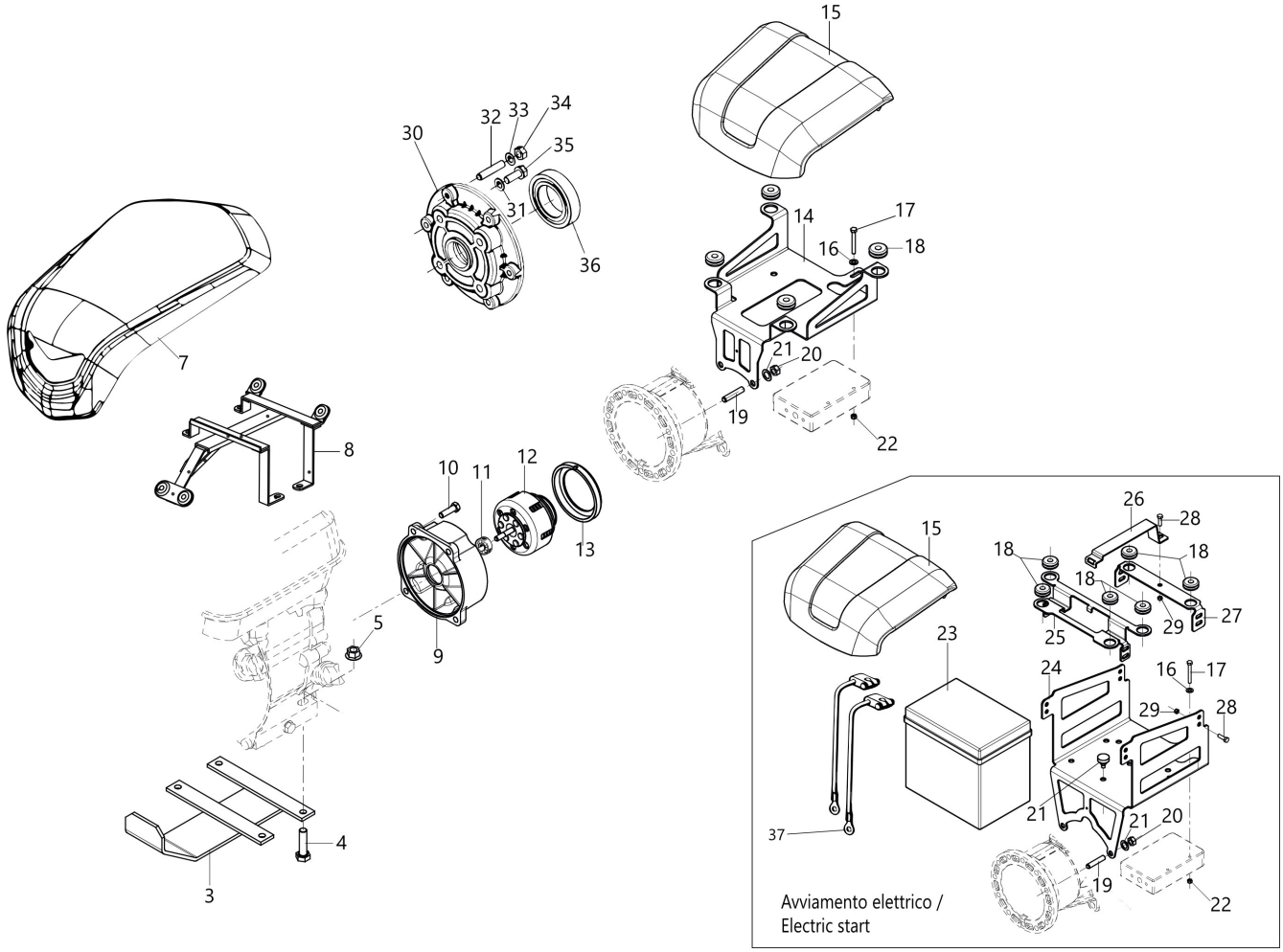

Copyright EMAK S.P.A.

Illustration Clutch (dopo 2019)

Ref.Nu	Qty	Part number	Description	Validity from	Validity till	Notes	Bulletin
3	1	68350255AR	Guard				
4	4	YN6335900	Screw				
5	4	3914001R	Nut				
7	1	68570001R	Hood				
8	1	68320319R	Support (Hood)				
9	1	68320117AR	Flange			Motori / Engines: CH 395;	
10	4	YN6309790	Screw				
11	1	N1289300R	Bearing			GX390;KD15 350; 15LD315;	
12	1	68320317R	Multiple disk clutch			K7000HD;	
12	1	68320123R	Multiple disk clutch			GX200; K800H; CH270	
13	1	68320137AR	Ring				
14	1	68350065BR	Support				
15	1	68350190R	Hood			Azzurro; Light blue	
16	2	3916006R	Washer				
17	2	310000009R	Screw				
18	4	68350114R	Support (Hood)				
19	4	YN3815300	Stud				
20	4	YN1458020	Nut				
21	4	YN4365400	Washer				
22	2	028200069R	Nut				
23	1	68350264R	Battery				
24	1	68320307R	Support				
25	1	68320306R	Bracket				
26	1	68330330R	Band				
27	1	68320278R	Bracket				
28	9	3906036R	Screw				
29	9	004400959R	Nut				
30	1	68310038AR	Flange			K800H; GX200	
31	4	YN6243980	Screw				
32	6	YN3815300	Stud				
33	6	YN4365400	Washer				
34	6	YN1458020	Nut				
35	4	YN6243980	Screw				
36	1	N1289300R	Bearing				
37	2	68330137R	Battery cables				

Copyright EMAK S.P.A.

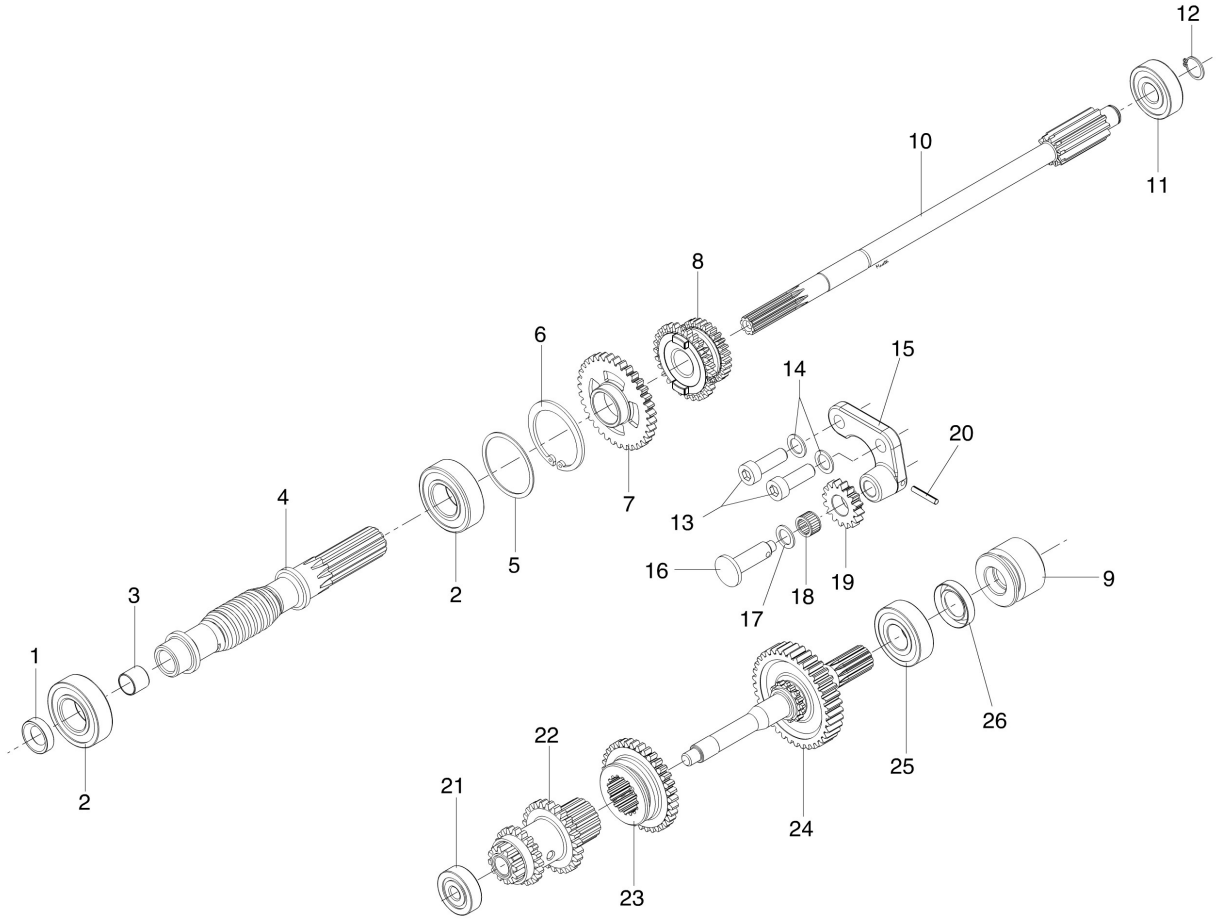

Copyright EMAK S.P.A.

Illustration Speed gears of the gearbox

Ref.Nu	Qty	Part number	Description	Validity from	Validity till	Notes	Bulletin
1	1	YN0204750	Gasket				
2	2	YN1270751	Bearing				
3	1	3038002R	Bushing				
4	1	68350070R	Shaft				
5	1	YN5010200	Washer				
6	1	YN0136900	Seeger				
7	1	YF1290812	Idler gear				
8	1	YF1290813	Gear (Sliding)				
9	1	YF1290816A	Sleeve				
10	1	68350072AR	Shaft				
11	1	YN1257700	Bearing				
12	1	3024015R	Seeger				
13	2	YN6330100	Screw				
14	2	005000343R	Washer				
15	1	YF1290807	Support				
16	1	68350174R	Pin				
17	1	3064001R	Washer				
18	1	3037026R	Roller cage				
19	1	YF1290804	Sprocket				
20	1	YN5115000	Elastic pin				
21	1	YN1251500	Bearing				
22	1	68320285R	Gear				
23	1	YF1290805	Sprocket				
24	1	R1290814	Shaft (Complete)				
25	1	YN1263701	Bearing				
26	1	YN0207300	Seal ring				

Copyright EMAK S.P.A.

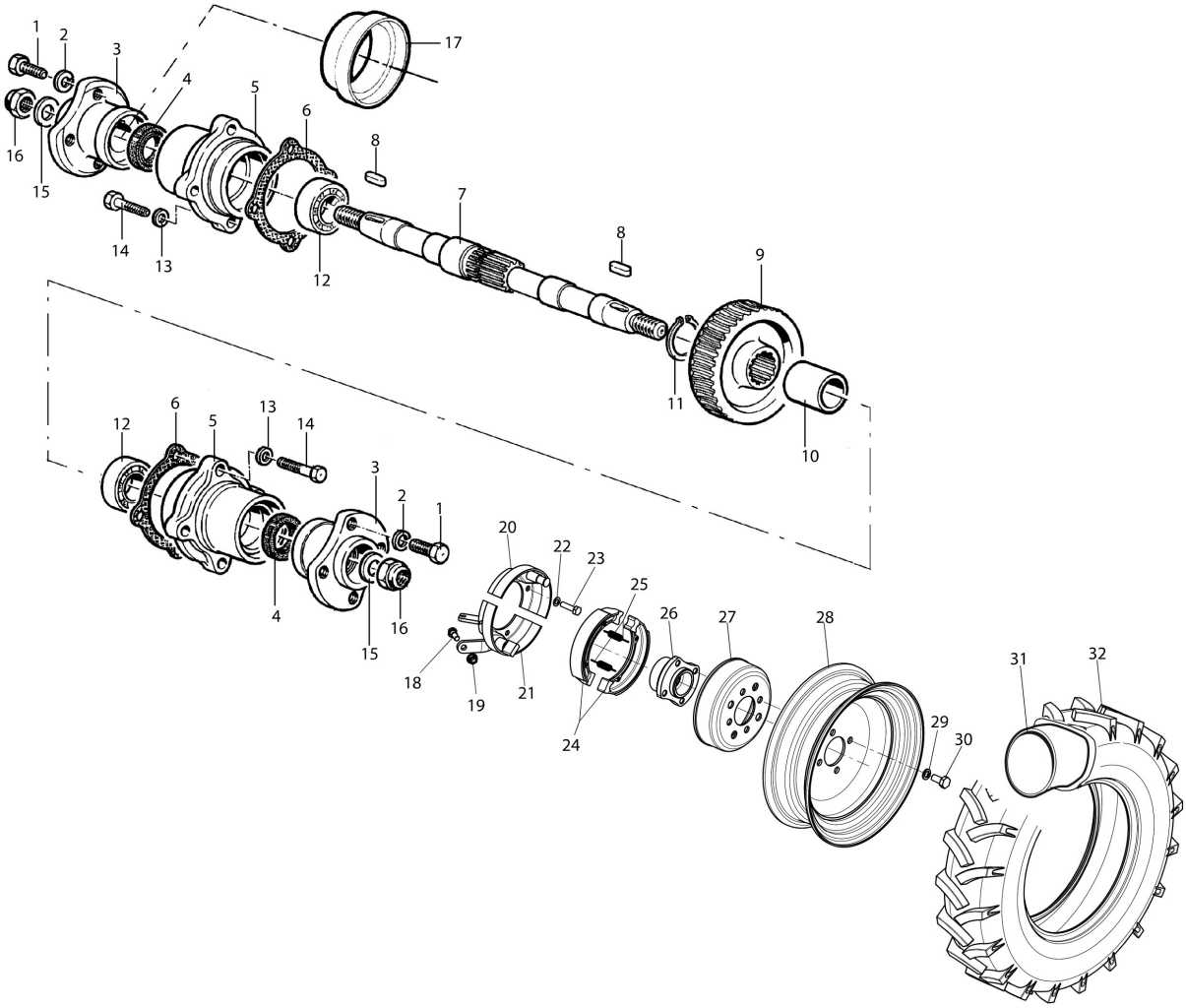

Copyright EMAK S.P.A.

Ref.Nu	Qty	Part number	Description	Validity from	Validity till	Notes	Bulletin
1	1	YN6322000	Screw				
2	1	3819014R	Grower				
3	1	YF1290211	Wheel hub				
4	1	YN0209720	Ring				
5	1	YF1290209	Support				
6	1	-	Not available for this product				
7	1	YF1290214	Shaft				
8	1	YN0646800	Key				
9	1	YF1290215	Wheel				
10	1	YF1290216	Spacer				
11	1	YN0124150	Seeger				
12	1	YN1272501	Bearing				
13	1	YN4365400	Washer				
14	1	3806067R	Screw				
15	1	YN4403000	Grower				
16	1	YN1479800	Nut				
17	1	F1290227	Guard				
18	2	68350150R	Pin				
19	2	3933032R	Nut				
20	2	YF1290220	Half-cable reel				
21	1	68350148R	Half-cable reel				
22	8	YN4365400	Washer				
23	8	322000001R	Screw				
24	4	YN2362700	Brake shoe				
25	4	YN3105100	Spring				
26	2	YF1290211	Wheel hub				
27	2	YN2382700	Cable reel				
28	2	69200099R	Rim			4.00-10" Disco registrabile;	
28	2	69200109R	Rim			4.00-10" Disco fisso; Fixed disc	
28	2	69200098R	Rim			4.00-8"	
29	8	3819014R	Grower				
30	8	YN6322000	Screw				
31	2	YN4881500	Inner tube			4.00-10"	
31	2	YN4881100	Inner tube			4.00-8"	
32	2	YN4852000B	Tire			4.00-10"	
32	2	YN4851600	Tire			4.00-8"	

Copyright EMAK S.P.A.

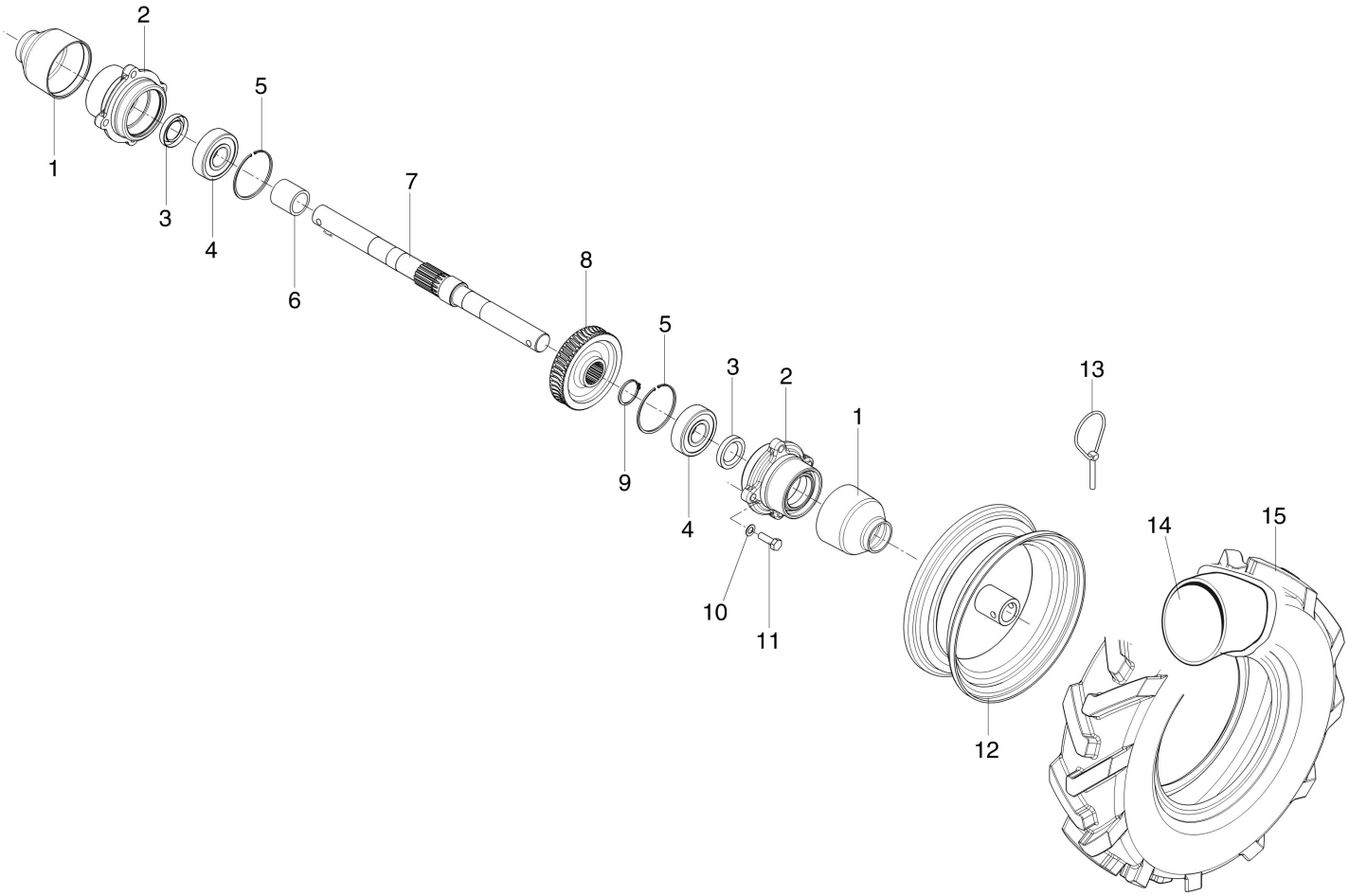

Copyright EMAK S.P.A.

Illustration Axle and wheels (fino 2019)

Ref.Nu	Qty	Part number	Description	Validity from	Validity till	Notes	Bulletin
1	2	68350181R	Guard				
2	2	YF1290209	Support				
3	2	YN0209720	Ring				
4	2	YN1272501	Bearing				
5	2	028200031R	Snap ring				
6	1	YF1290216	Spacer				
7	1	68350180R	Shaft				
8	1	YF1290215	Wheel				
9	1	YN0124150	Seeger				
11	8	3806067R	Screw				
12	2	69200116R	Rim			4.00-8"	
12	2	69200109R	Rim			4.00-10"	
13	2	YN5137500	Pin				
14	2	YN4881100	Inner tube			4.00-8"	
14	2	YN4881500	Inner tube			4.00-10"	
15	2	YN4851600	Tire			4.00-8"	
15	2	YN4852000B	Tire			4.00-10"	

Copyright EMAK S.P.A.

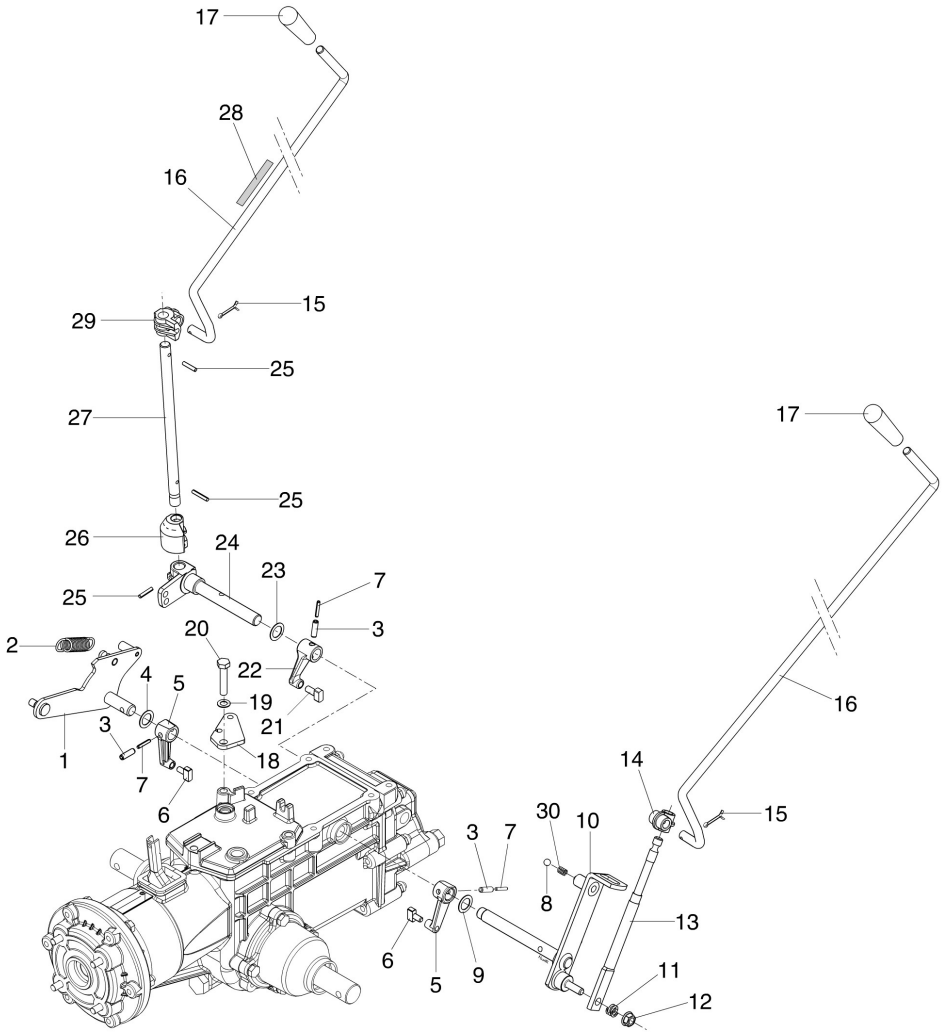

Copyright EMAK S.P.A.

Ref.Nu	Qty	Part number	Description	Validity from	Validity till	Notes	Bulletin
1	1	68350146AR	Cam				
2	1	YN3118060	Spring				
3	1	YN5125500	Pin				
4	1	YN4394700	Thickness				
5	1	YF1291603	Lever				
6	2	YF1291604	Sliding block				
7	3	YN5109300	Pin				
8	1	YN4745400	Ball				
9	1	YK8401029	Washer				
10	1	68320157R	Lever				
11	1	YN3111500	Spring				
12	1	3933032R	Nut				
13	1	68320152R	Lever (Selector switch)				
14	1	YF1061633	Fix plate (Handlebar)				
15	2	YN1054900	Split pin				
16	2	YF1291641A	Handlebar				
17	2	YN3753600	Knob				
18	1	68350145R	Plate				
19	1	YN4365400	Washer				
20	1	3806076R	Screw				
21	1	YF1050831	Sliding block				
22	1	YF1051700	Lever				
23	1	YN4394700	Thickness				
24	1	YF1291613D	Pin				
25	3	YN5113800	Pin				
26	1	YF1241614	Shoe				
27	1	YF1291637B	Lever				
28	1	68350009R	Mark (PTO)				
29	1	YF1291633	Support				
30	1	YN3104250	Spring				

Copyright EMAK S.P.A.

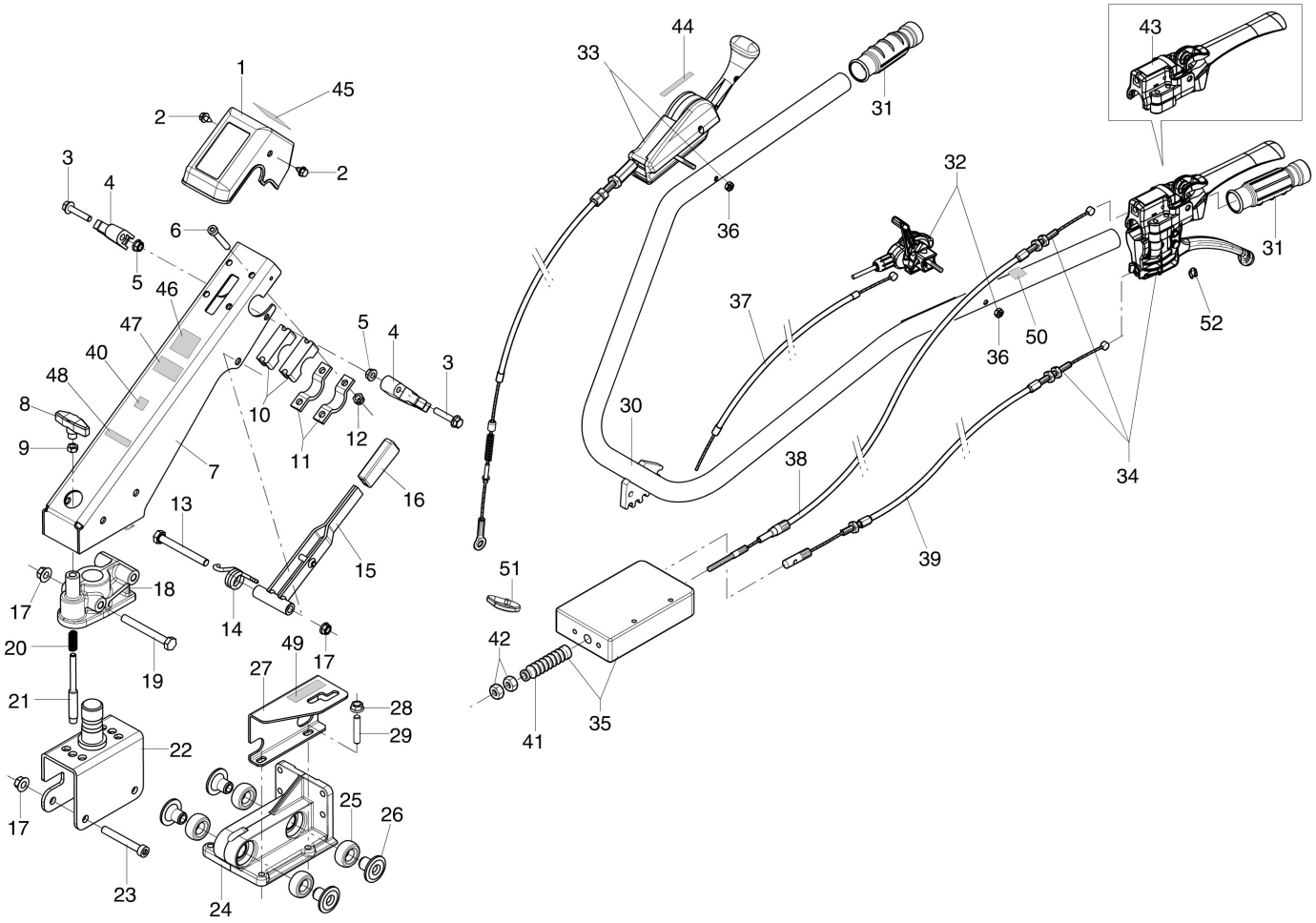

Copyright EMAK S.P.A.

Ref.Nu	Qty	Part number	Description	Validity from	Validity till	Notes	Bulletin
1	1	68240022R	Cover				
2	2	YN6243651	Screw				
3	2	3906075R	Screw				
4	2	YF1255009D	Support				
5	2	3933032R	Nut				
6	4	YN6289250	Screw				
7	1	68610042AR	Handlebar rod			Azzurro ; Light blue	
8	1	YN3753100	Handle				
9	1	YN1457300	Nut				
10	2	YF1181646	Support				
11	2	YF1151601	Clamp				
12	4	YN1458800	Nut				
13	1	YN6361500	Screw				
14	1	YF1291634B	Spring				
15	1	YF1291636	Lever				
16	1	YN2840480	Knob				
17	4	3914001R	Nut				
18	1	68610051R	Grip-end handlebar rod				
19	2	YN6361500	Screw				
20	1	YK3503360	Spring				
21	1	YF1251637	Shutter				
22	1	68350185R	Column support				
23	2	YN6357700	Screw				
24	1	68350182AR	Column support				
25	4	YK0300910	Shock absorber				
26	4	YK3501080	plate				
27	1	68350158AR	Selector switch (Gear-shift lever)				
28	4	3933032R	Nut				
29	4	YN3815300	Stud				
30	1	68350183R	Handlebar				
31	2	68320126R	Knob				
32	1	3044015AR	Switch/Throttle			Motore Diesel; Diesel	
32	1	68350102R	Switch/Throttle			Motore benzina; Fuel engine	
33	1	68350230	Control lever			Inversore ; Inverter	
34	1	68350101AR	Control lever			Frizione ; Clutch	
35	1	68350179R	Device EHS				
36	2	3914006R	Nut				
37	1	68350221R	Throttle cable				
38	1	68350222AR	Cable				
39	1	68350224R	Cable			Da abbinare al	
40	1	68350211R	Label (Ergonomic handling system)			(pic.32)	
41	1	66060614R	Buffer				
42	2	034000013R	Nut				

Copyright EMAK S.P.A.

Ref.Nu	Qty	Part number	Description	Validity from	Validity till	Notes	Bulletin
43		-	Not available for this product				
44	1	68320272AR	Label				
45	1	YF1291650	Mark				
46	1	68670016R	Mark BERTOLINI			Logo "BERTOLINI"	
47	1	68350127R	Label (405S)				
48	1	3056375R	Mark (Made in Italy)				
49	1	68350003R	Mark (Gear-shift lever)				
50	1	YN5380660	Mark (Clutch)				
51	1	3059018	Band				
52	1	F1370413	Clamp				

Copyright EMAK S.P.A.

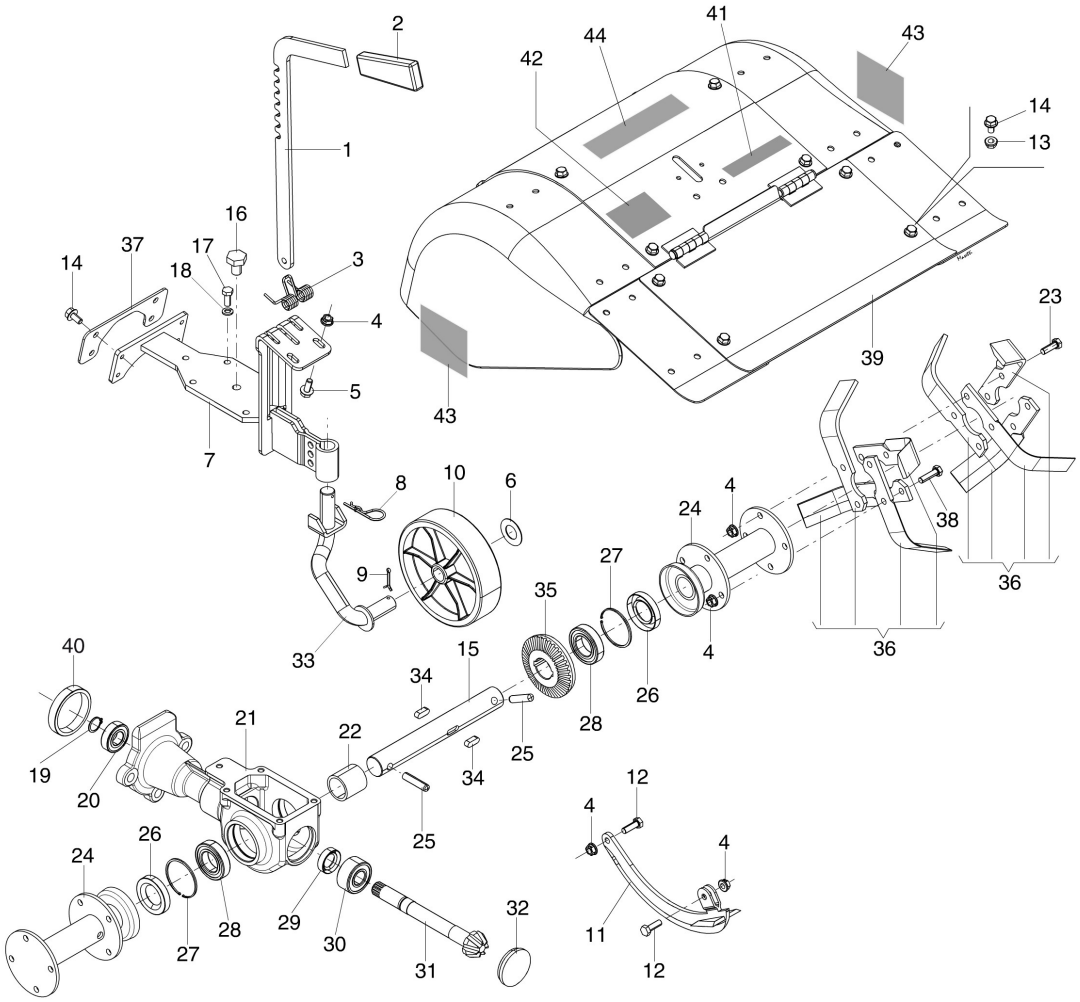

Copyright EMAK S.P.A.

Illustration 60 cm rotor with adjustable cowling and fixed connection 69219103

Ref.Nu	Qty	Part number	Description	Validity from	Validity till	Notes	Bulletin
1	1	69210262	Rod				
2	1	N2840490	Knob				
3	1	69210102R	Spring				
4	28	YN1457570	Nut				
5	2	3906070R	Screw				
6	1	N5003250	Washer				
7	1	69210247R	Cover				
8	1	N1054500	Cotter pin				
9	1	YN1060200	Cotter pin				
10	1	YK1102480	Support wheel				
11	1	69210240R	Cutter tool				
12	2	3806067R	Screw				
13	12	3933032R	Nut				
14	16	3933034AR	Screw				
15	1	F0017016DR	Shaft				
16	1	YN5254000	Oil cap				
17	5	3906066R	Screw				
18	5	3819013R	Grower				
19	1	3024020R	Seeger				
20	1	YN1263201	Bearing				
21	1	69210261R	Tiller body				
22	1	F0017018	Spacer			Filettatura DX; RH thread	
23	8	322000001R	Screw				
24	2	YF0017005	Spacer				
25	2	YF0017024	Pin				
26	2	N0212450	Ring				
27	2	N0138000	Seeger				
28	2	N1274500	Bearing				
29	1	YN0207400	Ring				
30	1	N1264051	Bearing				
31	1	YF0015581	Sprocket				
32	1	YN5276700	Cap				
33	1	K3501830R	Support				
34	2	N0651610	Key				
35	1	69210226R	Crown gear				
36	1	R0000139	Cutters kit			Per fresa 70 cm, kit	
37	2	69210272R	Spacer				
38	8	3806074R	Screw			10pz; For tiller 70 cm, set	
39	1	69210193R	Complete hood (60cm)			Colore Grigio; Grey color	
40	1	YF0013529	Bushing			LEFT, 10pcs	
41	1	3056374R	Mark (Made in Italy)			Su richiesta; Upon request	
42	1	YF1233111	Mark (Danger)			Su richiesta; Upon request	
43	2	69210216R	Mark BERTOLINI			Su richiesta; Upon request	
44	1	69210215R	Mark BERTOLINI			Su richiesta; Upon request	

Copyright EMAK S.P.A.

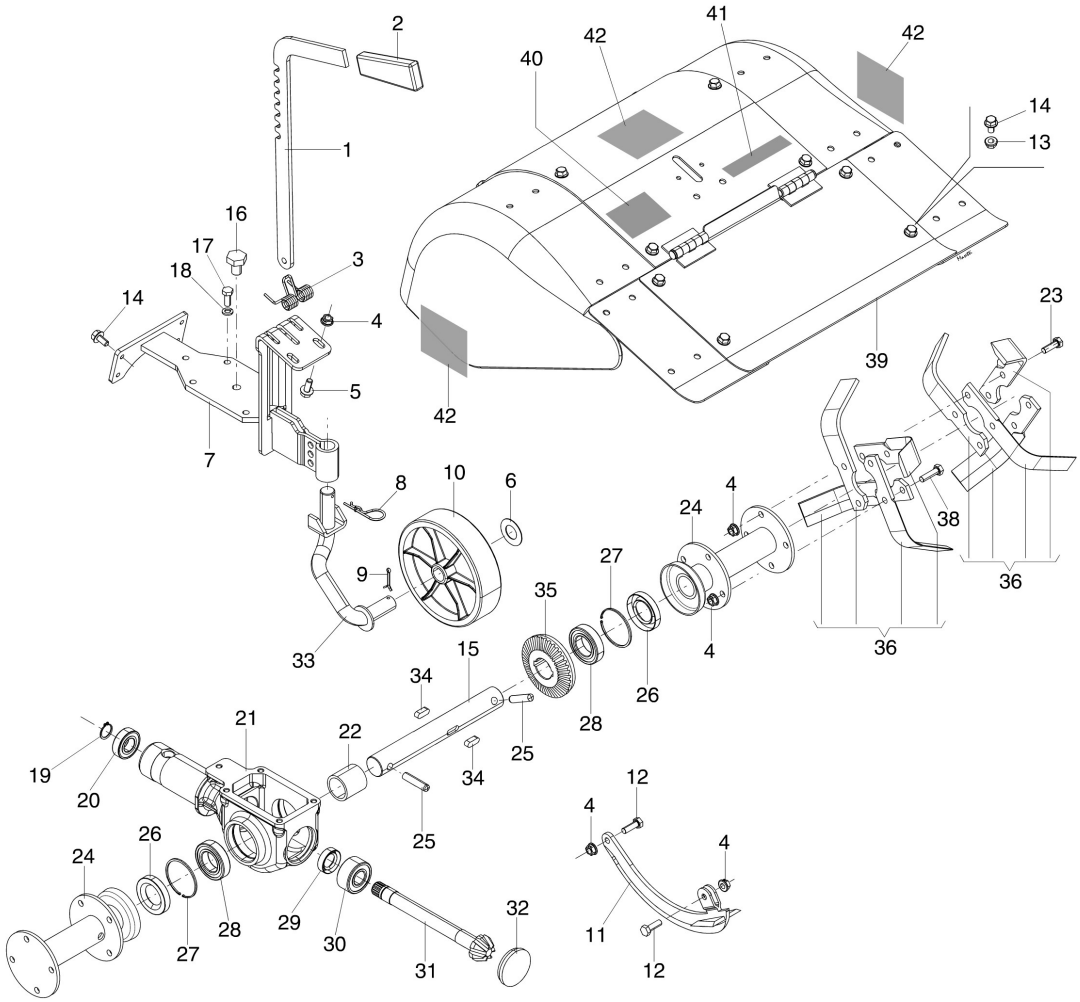

Copyright EMAK S.P.A.

Illustration 60 cm rotor with adjustable cowling and quickfit connection 69219089

Ref.Nu	Qty	Part number	Description	Validity from	Validity till	Notes	Bulletin
1	1	69210262	Rod				
2	1	N2840490	Knob				
3	1	69210102R	Spring				
4	28	YN1457570	Nut				
5	2	3906070R	Screw				
6	1	N5003250	Washer				
7	1	69210247R	Cover				
8	1	N1054500	Cotter pin				
9	1	YN1060200	Cotter pin				
10	1	YK1102480	Support wheel				
11	1	69210240R	Cutter tool				
12	2	3806067R	Screw				
13	12	3933032R	Nut				
14	16	3933034AR	Screw				
15	1	F0017016DR	Shaft				
16	1	YN5254000	Oil cap				
17	5	3906066R	Screw				
18	5	YN4366600	Washer				
19	1	3024020R	Seeger				
20	1	YN1263201	Bearing				
21	1	69210225AR	Tiller body				
22	1	F0017018	Spacer			Filettatura DX; RH thread	
23	8	322000001R	Screw				
24	2	YF0017005	Spacer				
25	2	YF0017024	Pin				
26	2	N0212450	Ring				
27	2	N0138000	Seeger				
28	2	N1274500	Bearing				
29	1	YN0207400	Ring				
30	1	N1264051	Bearing				
31	1	F0015583R	Sprocket				
32	1	YN5276700	Cap				
33	1	K3501830R	Support				
34	2	N0651610	Key				
35	1	69210226R	Crown gear				
36	1	R0000139	Cutters kit			Per fresa 60 cm, kit	
38	8	3806074R	Screw				
39	1	69210193R	Complete hood (60cm)			Colore: Grigio; Grey color	
40	1	YF1233111	Mark (Danger)			Su richiesta; Upon request	
41	1	3056374R	Mark (Made in Italy)			Su richiesta; Upon request	
42	2	69210216R	Mark BERTOLINI			Su richiesta; Upon request	
43	1	69210215R	Mark BERTOLINI			Su richiesta; Upon request	

Copyright EMAK S.P.A.

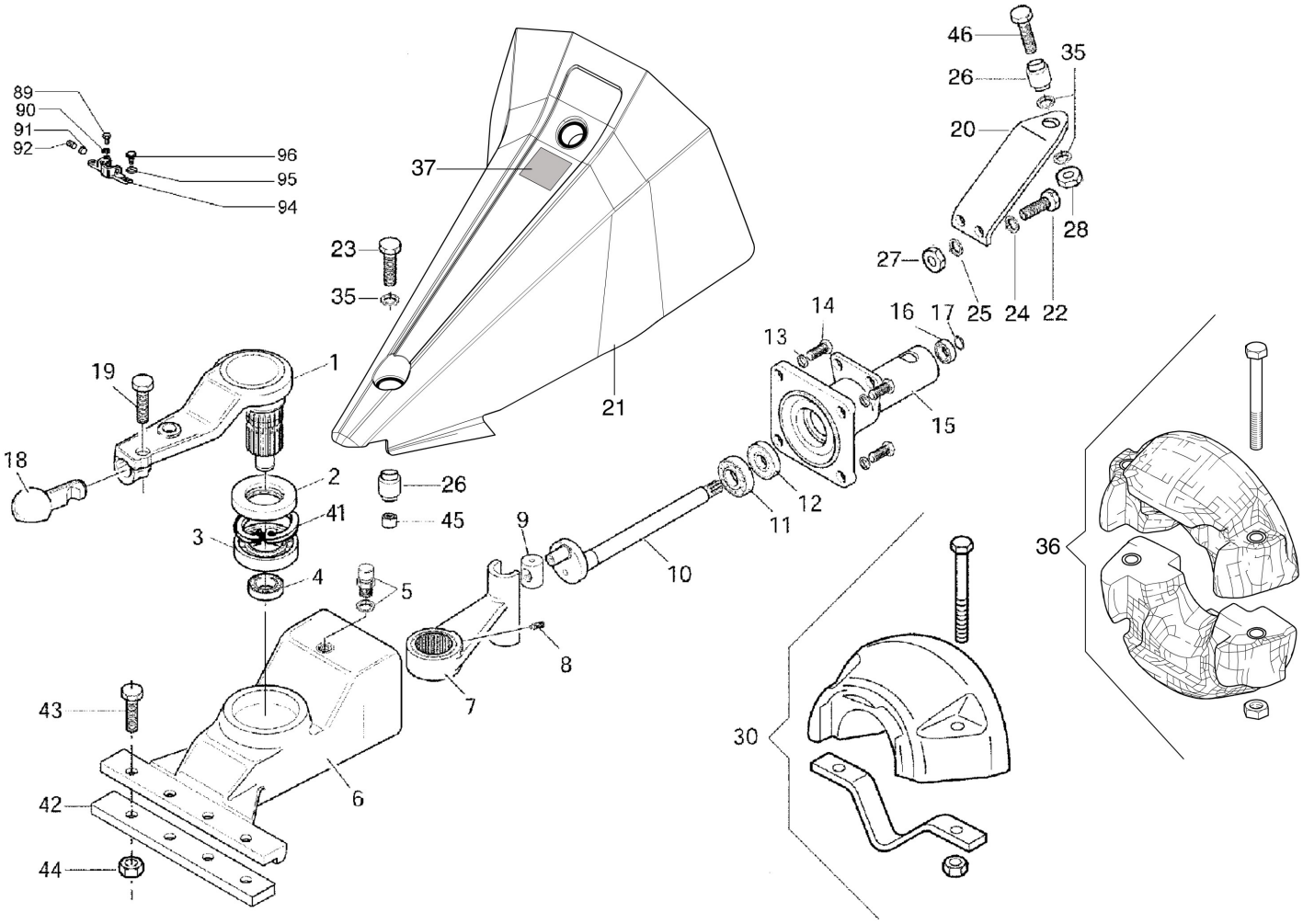

Copyright EMAK S.P.A.

Illustration Oil bath movement 69229096/69229096A

Ref.Nu	Qty	Part number	Description	Validity from	Validity till	Notes	Bulletin
1	1	69220059R	Connecting rod (External)				
2	1	YN0222805	Ring				
3	1	YN1289200	Bearing				
4	1	YN1263701	Bearing				
5	1	YK4101420	Cap				
6	1	F1303100B	Housing				
7	1	F1303102D	Connecting rod				
8	1	N6251000	Screw				
9	1	YF1303106	Switch				
10	1	F1303108	Shaft				
11	1	YN1272501	Bearing				
12	1	YN0210045	Ring				
13	1	3819014R	Grower				
14	1	3806094R	Screw				
15	1	F1303101B	Cover				
16	1	YN1263201	Bearing				
17	1	3024020R	Seeger				
18	1	YF1303155B	Pin				
19	1	3806094R	Screw				
20	1	F1303125	Support				
21	1	69222012R	Hood			Azzurro ; Light blue	
22	1	3806067R	Screw				
23	1	YN6402600	Screw				
24	1	3819013R	Grower				
25	1	3916008R	Washer				
26	1	N4924000R	Silent block				
27	1	320000028R	Nut				
28	1	YN1470200	Nut				
30	1	L0105700	Set (Counterweight)			Singola ; Single	
35	1	3916012R	Washer				
36	1	L0102300	Set (Counterweight)			Doppia ; Double	
37	1	68670016R	Mark BERTOLINI				
41	1	N0140800	Seeger				
42	1	L0081100	Thickness				
43	1	YN6332800	Screw				
44	1	YN1463650	Nut				
45	1	F1303133	Spacer				
46	1	N6399710	Screw				
89	1	YN6262200	Screw				
90	1	3819013R	Grower				
91	1	YF1073364	Valve				
92	1	N6433900R	Screw				
94	1	YF1073363B	Clutch driver				
95	1	3819013R	Grower				

Copyright EMAK S.P.A.

Ref.Nu	Qty	Part number	Description	Validity from	Validity till	Notes	Bulletin
96	1	3806063R	Screw				

Copyright EMAK S.P.A.

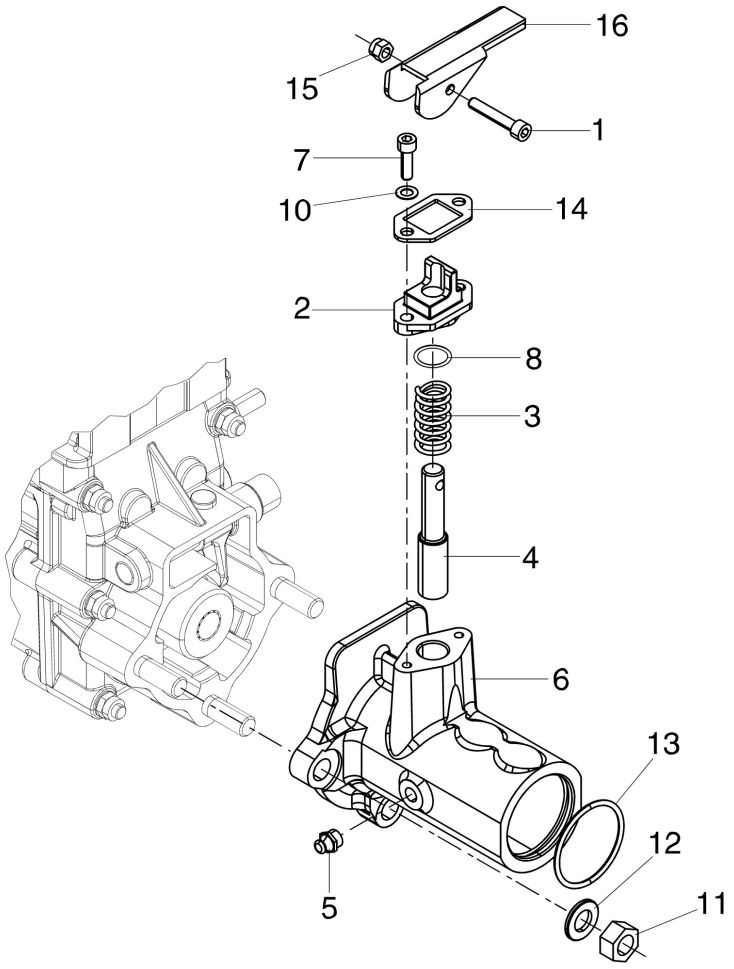

Copyright EMAK S.P.A.

Illustration Quickfit 69212006

Ref.Nu	Qty	Part number	Description	Validity from	Validity till	Notes	Bulletin
1	1	3801027R	Screw				
2	1	YF1294702	Slide				
3	1	YN3118700	Spring				
4	1	YF1054710	Shutter				
5	1	YN2605600	Nipple				
6	1	69210090AR	Flange				
7	2	3801022R	Screw				
8	1	3049016R	O-ring				
10	2	YN4358110	Washer				
11	3	YN1470500	Nut				
12	3	YN4387700	Washer				
13	1	YK7035045	O-ring				
14	1	YF1294701	Plate				
15	1	3914008R	Nut				
16	1	YF1294700	Lever				

Copyright EMAK S.P.A.

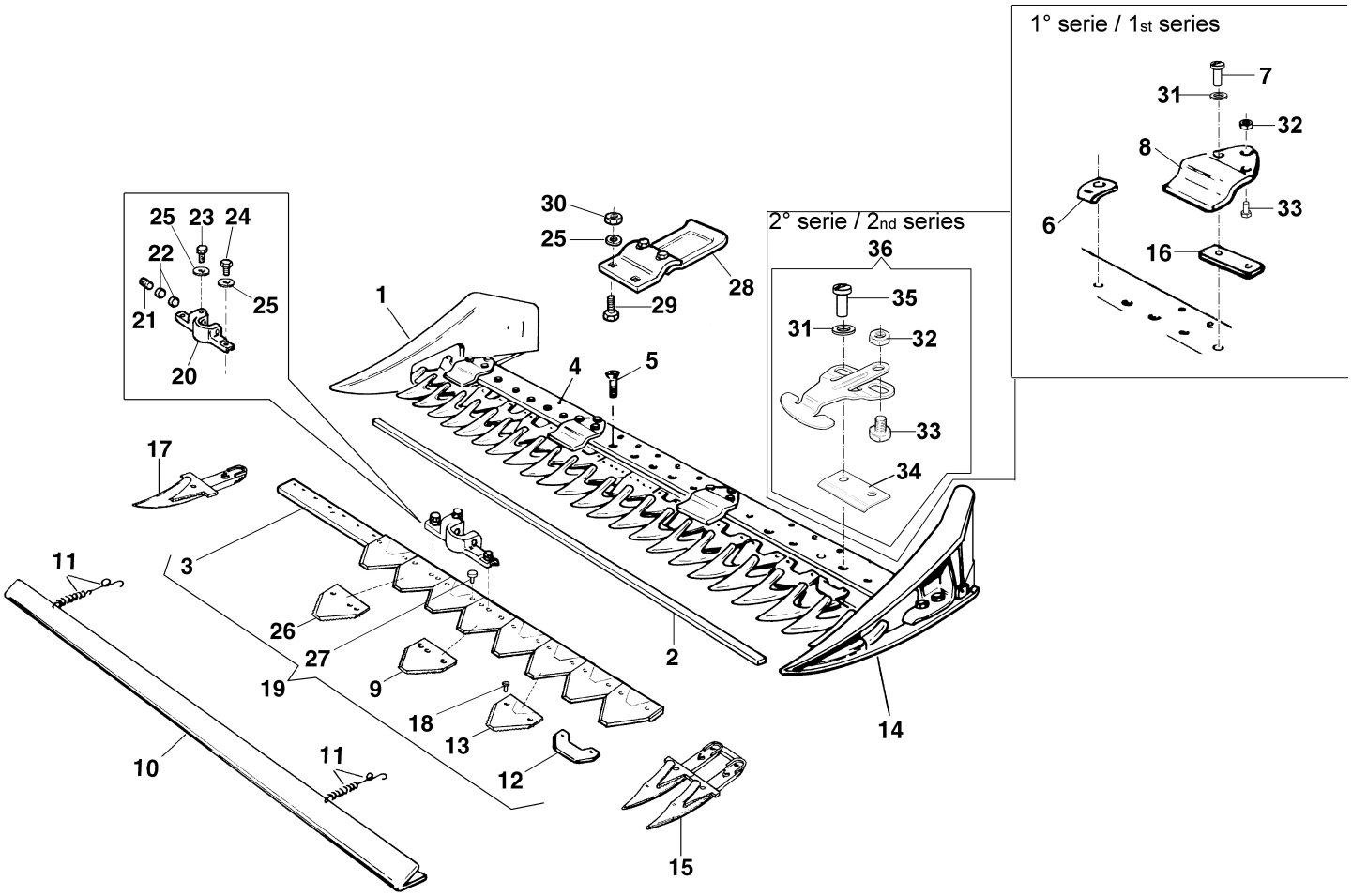

Copyright EMAK S.P.A.

Illustration Special cutter bar 69229084/69229085/69229086/69229087

Ref.Nu	Qty	Part number	Description	Validity from	Validity till	Notes	Bulletin
1	1	69229098	Pair of directional guides for cutterbar			DX; RIGHT	
2	1	69220017	Rod			1150 mm	
2	1	F1073220R	Slide			1450 mm	
2	1	F0591593R	Slide			1270 mm	
2	1	F0712027	Slide			950 mm	
3	1	69220023	Rod				
4	1	F1303116	Plate			950 mm	
4	1	F1303117	Plate			1150 mm	
4	1	F1303118	Plate			1270 mm	
4	1	F1303119	Plate			1450 mm	
5	15	YN6325400	Screw				
6	4	69220018	Support		31/12/2013	Per barre / for bars:	BT6-006-07/14
7	8	3906099	Screw		31/12/2013	Per barre / for bars:	BT6-006-07/14
8	4	69220047	Pressblade kit		31/12/2013	Per barre / for bars: 69229039/69229040/6922	BT6-006-07/14
9	1	F1073377R	Blade				
10		-	Not available for this product				
11		-	Not available for this product				
12	13	F1073317	Plate				
13	13	YF0582091	Blade				
14	1	69229098	Pair of directional guides for cutterbar			SX; LEFT	
15	11	F0582688R	Tooth (Double)				
16	12	LS621107	Spacer			Per barre / for bars:	BT6-006-07/14
17	1	F0582738	Tooth (Single)				
18	28	YN0886600	Rivet				
19	1	YF1073385	Blade			1270 mm SF	
19	1	YF1073386	Blade			1450 mm SF	
19	1	YF1073384	Blade			1150 mm SF	
19	1	YF1073383	Blade			950 mm SF	
20	1	YF1073376B	Clutch driver				
21	1	N6433900R	Screw				
22	2	YF1073364	Valve				
23	1	YN6262200	Screw				
24	2	3806063R	Screw				
25	7	3819013R	Grower				
26	1	F1073378R	Blade				
27	2	F1073261	Rivet				
28	2	69220024R	Complete slide				
29	8	3806070R	Screw				
30	8	320000028R	Nut				
31	8	3916010R	Washer				BT6-006-07/14
32	4	N1462800	Nut				BT6-006-07/14
33	4	N6314900	Screw				BT6-006-07/14

Copyright EMAK S.P.A.

Ref.Nu	Qty	Part number	Description	Validity from	Validity till	Notes	Bulletin
34	4	LS621197	Pressblade	01/01/2014			BT6-006-07/14
35	8	N6333300	Screw	01/01/2014			BT6-006-07/14
36	4	69220047	Pressblade kit	01/01/2014			BT6-006-07/14

Copyright EMAK S.P.A.

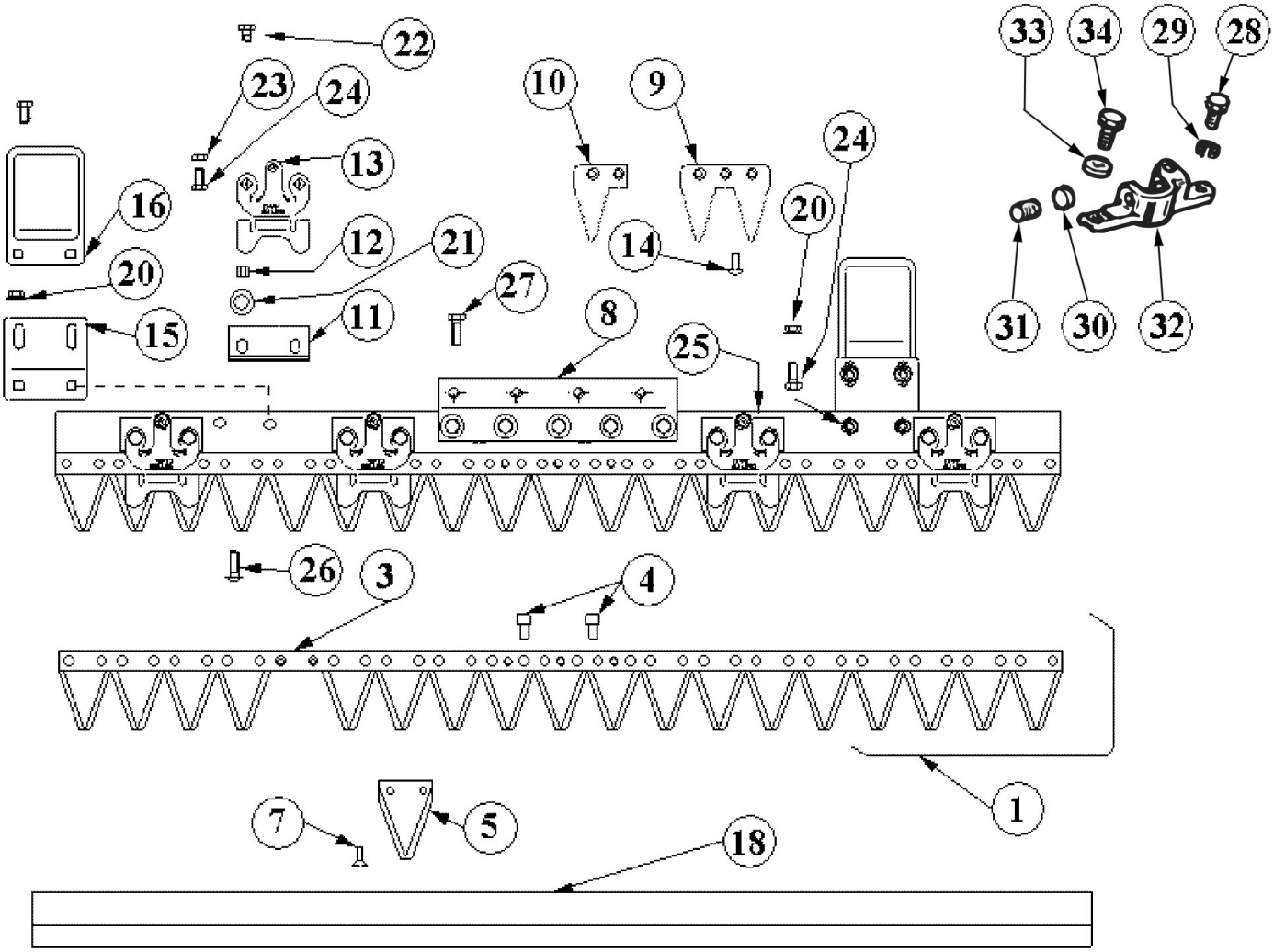

Copyright EMAK S.P.A.

Illustration Special cutter bar 69229068/69229069/69229070/69229071

Ref.Nu	Qty	Part number	Description	Validity from	Validity till	Notes	Bulletin
1	1	YLS471906	Complete Blade			97 cm	
1	1	YLS472306	Complete Blade			117 cm	
1	1	YLS472506	Complete Blade			127 cm	
1	1	YLS472906	Complete Blade			147 cm	
3	1	LS3419225	Tube				
4	1	LS625231	Pin				
5	19	LS310067R	Blade			3 fori; 3 holes	
7	36	LS210612R	Rivet				
8	1	LS627027	Plate				
9	9	LS623122R	Tooth (Double)			Dente doppio; Double tooth	
10	1	LS623124	Tooth (Single)			Dente singolo; Singolo tooth	
11	6	LS621139	Blades support				
12	12	LS621135R	Spacer				
13	6	LS621230	Pressblade				
14	24	LS215619R	Rivet				
15	2	LS621136R	Support				
16	2	LS621172	Sliding block				
18	1	LS625056	Guard 97 cm			97 cm	
18	1	LS625061	Guard cm 117			117 cm	
18	1	LS625062	Guard cm 127			127 cm	
18	1	LS625064	Guard cm 147			147 cm	
20	8	LS7060008	Nut				
21	12	3916008R	Washer				
22	12	LS7000810	Screw				
23	6	320000028R	Nut				
24	4	LS7190825	Screw				
25	1	LS62692310	Complete cutter plate			97 cm	
25	1	LS626918	Plate			117 cm	
25	1	LS626924	Plate			127 cm	
25	1	LS626925	Plate			147 cm	
26	12	LS7190822	Screw				
27	5	3806063R	Screw				
28	1	YN6262200	Screw				
29	1	3819013R	Grower				
30	1	YF1073364	Valve				
31	1	N6433900R	Screw				
32	1	YF1073363B	Clutch driver				
33	1	3819013R	Grower				
34	1	3806063R	Screw				

Copyright EMAK S.P.A.

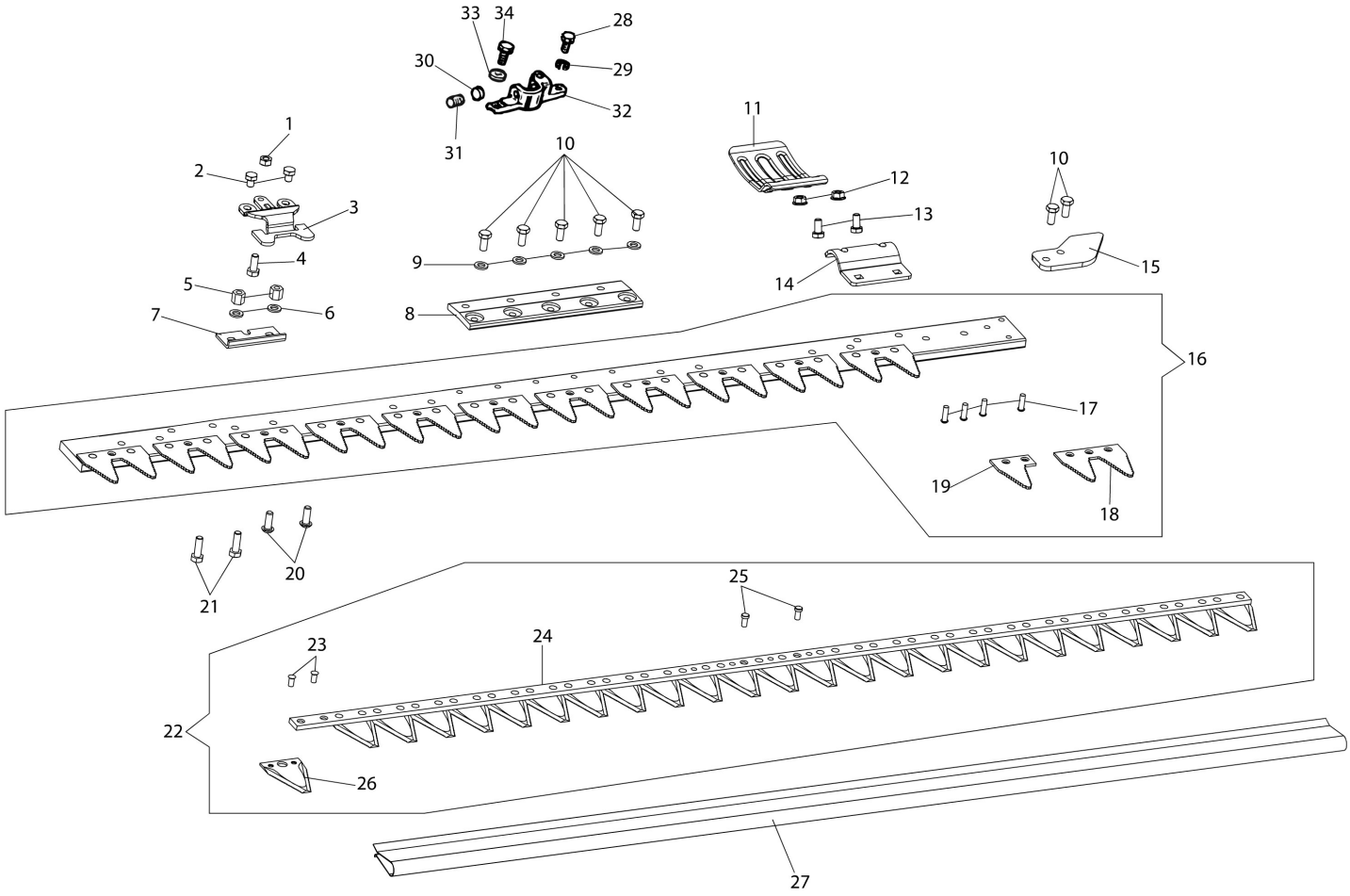

Copyright EMAK S.P.A.

Illustration Special cutter bar 69229068A/69229069A/69229070A/69229071A

Ref.Nu	Qty	Part number	Description	Validity from	Validity till	Notes	Bulletin
1	6	LS7020008	Nut				
2	12	028200039R	Screw				
3	6	LS621230	Pressblade				
4	6	3906066R	Screw				
5	12	LS621135R	Spacer				
6	12	3916008R	Washer				
7	6	LS621139	Blades support				
8	1	LS627027	Plate				
9	5	LS7092901	Washer				
10	9	YN6254600	Screw				
11	2	LS621172	Sliding block				
12	8	3933032R	Nut				
13	4	3806063R	Screw				
14	2	LS621136R	Support				
15	2	LS624058	Guard				
16	1	LS62692410	Complete cutter plate		127 cm		
16	1	LS62692310	Complete cutter plate		97 cm		
16	1	LS62691810	Complete cutter plate		117 cm		
16	1	LS62692510	Complete cutter plate		147 cm		
17	24	LS215619R	Rivet				
18	12	LS623122R	Tooth (Double)				
19	1	LS623124	Tooth (Single)				
20	12	LS7190822	Screw				
21	4	3806067R	Screw				
22	1	YLS472306	Complete Blade		117 cm		
22	1	YLS472906	Complete Blade		147 cm		
22	1	YLS472506	Complete Blade		127 cm		
22	1	YLS471906	Complete Blade		97 cm		
23	48	LS210612R	Rivet				
24	1	LS3425225	Tube				
25	2	LS625231	Pin				
26	25	LS310067R	Blade				
27	1	LS625061	Guard cm 117		117 cm		
27	1	LS625064	Guard cm 147		147 cm		
27	1	LS625062	Guard cm 127		127 cm		
27	1	LS625056	Guard 97 cm		97 cm		
28	1	YN6262200	Screw				
29	1	3819013R	Grower				
30	1	YF1073364	Valve				
31	1	N6433900R	Screw				
32	1	YF1073363B	Clutch driver				
33	1	3819013R	Grower				
34	1	3806063R	Screw				

Copyright EMAK S.P.A.

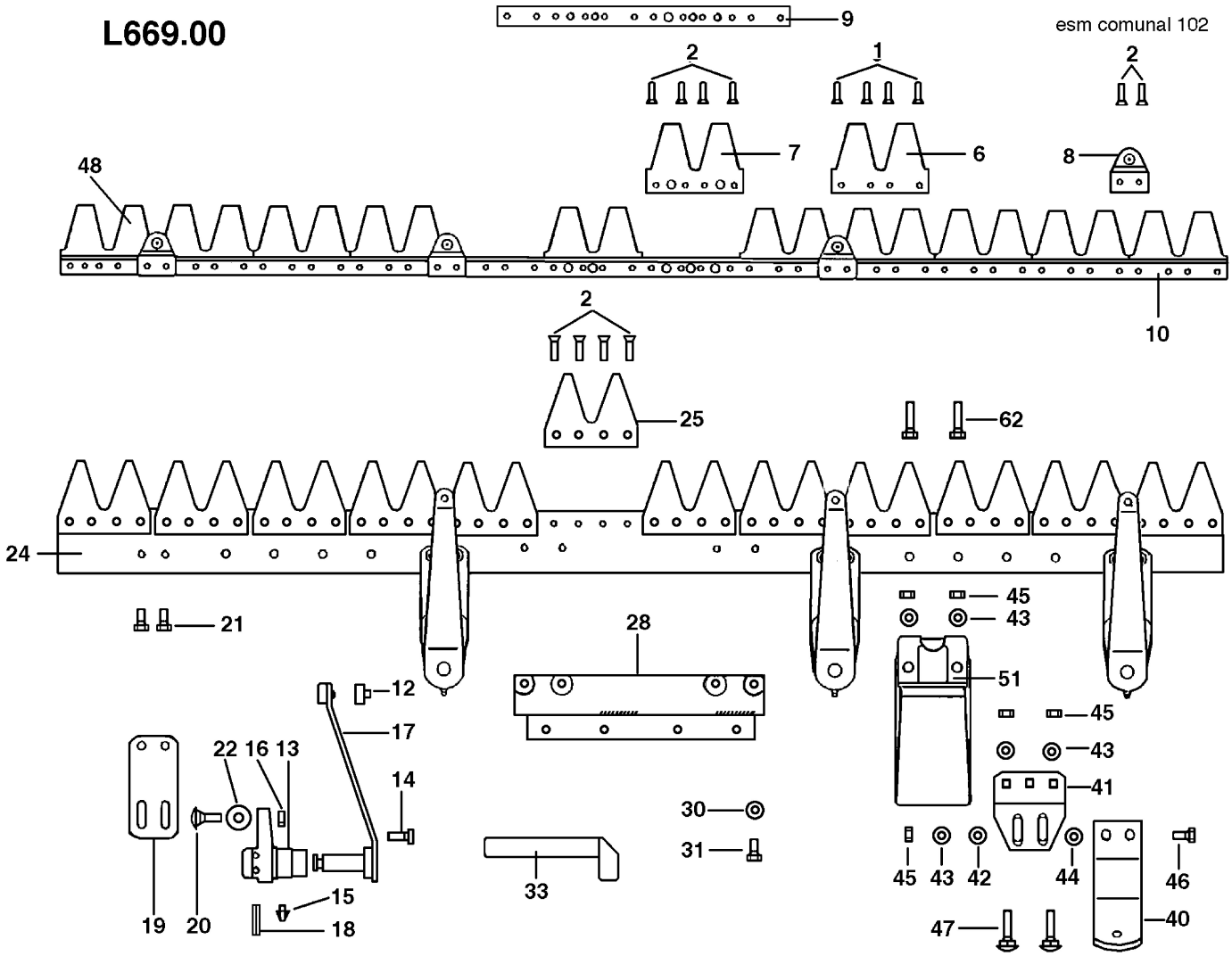

Copyright EMAK S.P.A.

Illustration Cutter bar L0066900

Ref.Nu	Qty	Part number	Description	Validity from	Validity till	Notes	Bulletin
1	1	R1504705	Rivet				
2	1	R1504706	Rivet				
6	1	F1073451	Shear blade (Double)				
7	1	F1073452	Shear blade (Double)				
8	1	R1504764	Support				
9	1	F1073438	Plate				
10	1	F1073525	Back (Blade)			102 cm	
12	1	R1504773	Bushing				
13	1	R1504768	Support				
14	1	R1504769	Screw				
15	1	R1504770	Nipple				
16	1	R1504723	Nut				
17	1	R1504772	Swing arm				
18	1	R1504771	Pin				
19	1	F1073436	Plate				
20	1	F1073442	Screw				
21	1	YN6249300	Screw				
22	1	3916010R	Washer				
24	1	F1073526	Back (Bar)			102 cm	
25	1	F1073456	Tooth (Double)				
28	1	F1073401	Connection plate				
30	1	YN4365400	Washer				
31	1	YN6254600	Screw				
33	1	F1073415	Lever (Fitting)				
40	1	F1073428	Sole				
41	1	F1073430	Attachment (Sole)				
42	1	3916008R	Washer				
43	1	YN4365400	Washer				
44	1	F1073443	Washer				
45	1	R1504723	Nut				
46	1	3806067R	Screw				
47	1	R1504720	Screw				
48	1	F1073524	Blade			102 cm	
51	1	F1073432	Slide shoe				
62	1	3806070R	Screw				

Copyright EMAK S.P.A.