Buffalo Turbine LLC
180 Zoar Valley Road
Springville, NY 14141
Tel: 716-592-2700
Fax: 716-592-2460

CYCLONE 8000 DEBRIS BLOWER
MODEL # BT-CYC8KK

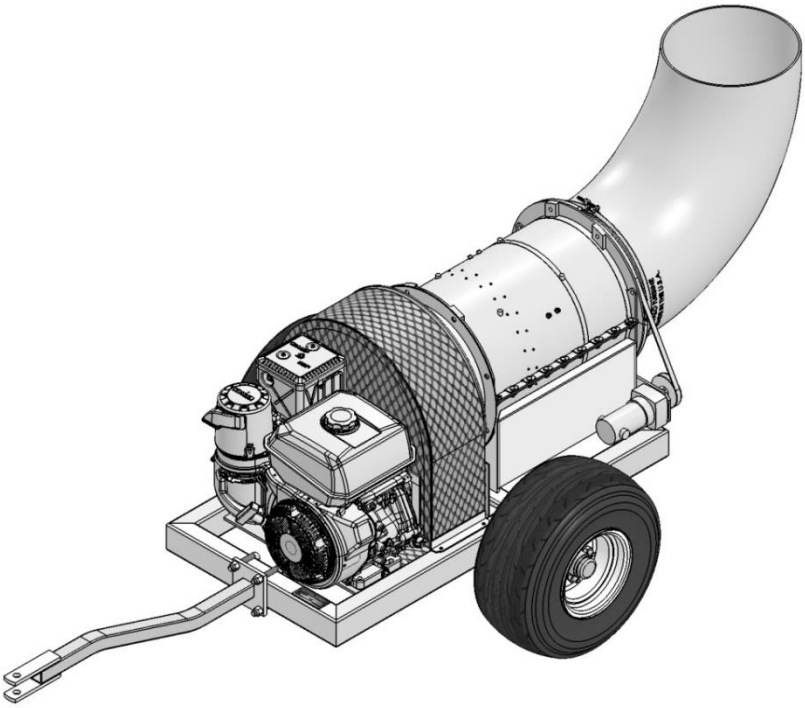

Control:	12V wired 360 Degree Nozzle Control
Machine Warranty:	1 Year Limited Warranty
Kohler Engine Warranty:	3 Year Limited Warranty
Frame Length (Skid Mount):	43”
Overall Length with nozzle (Skid Mount):	70”
Overall Length with Nozzle:	102”
Frame Width (Skid Mount):	22”
Overall Width Including Wheels:	44”
Height:	37” (Approx. 24” to the top of the guard when skid mounted)
Fuel Capacity:	6 gallons
Weight:	360 lbs
Input Power:	CH440 Kohler Gasoline Engine
Input RPM:	up to 3200 RPM
Nozzle:	Aerospace Polymer Nozzle (optional aluminum nozzles are available)
Outlet Size:	approx. 12”
Tires:	18.5 x 8.50-8
Trailer:	Bolt on trailer package with 2 position tongue
Shipping Weight:	400 lbs (181.44kg)
Shipping Box Size:	52”(132.08cm) x 34”(86.36cm) x 46”(116.84cm)